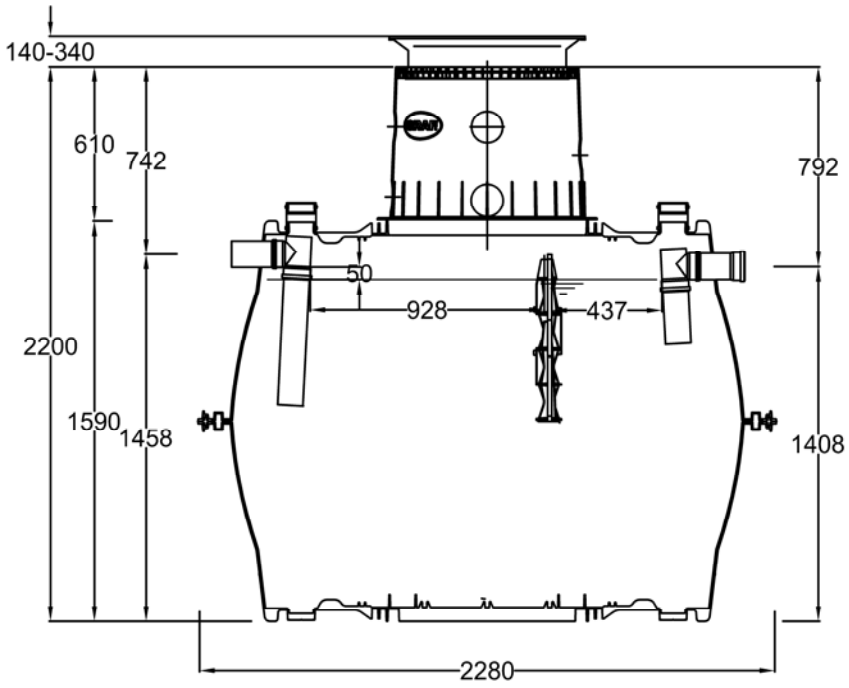

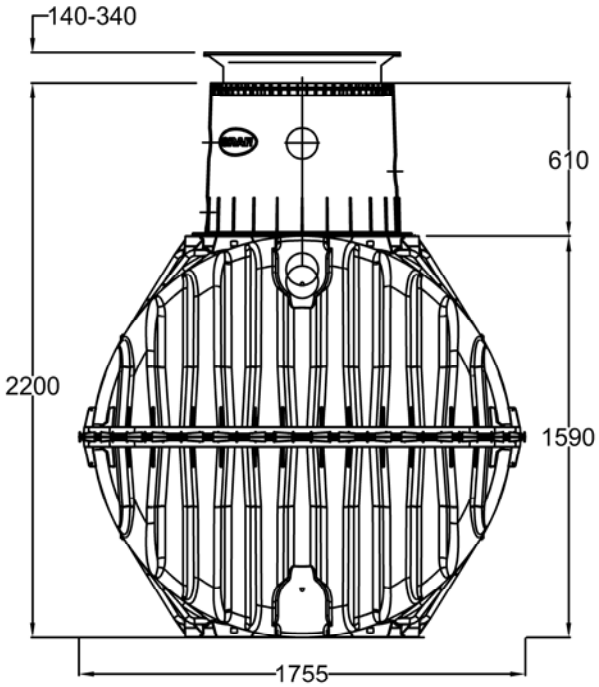

EN

Carat 3750L septic tank
with scum baffle, pos. 2/3

Artikel-Nr.
product no.
article no.
articulo no.

gezeichnet drawn	CSC	Gewicht weight	
Datum date	2017.05.23	Toleranz tolerance	+/- 3%
Maßstab scale	M 1:40	Einheiten units	mm [inch] gal. = US gal.

Graf Australia Pty Ltd.
23 Success Way
Henderson WA 6166

Phone: +61 8 9437 4949
Email:
info@grafplasticsaustralia.com.au
Web:
www.grafplasticsaustralia.com.au