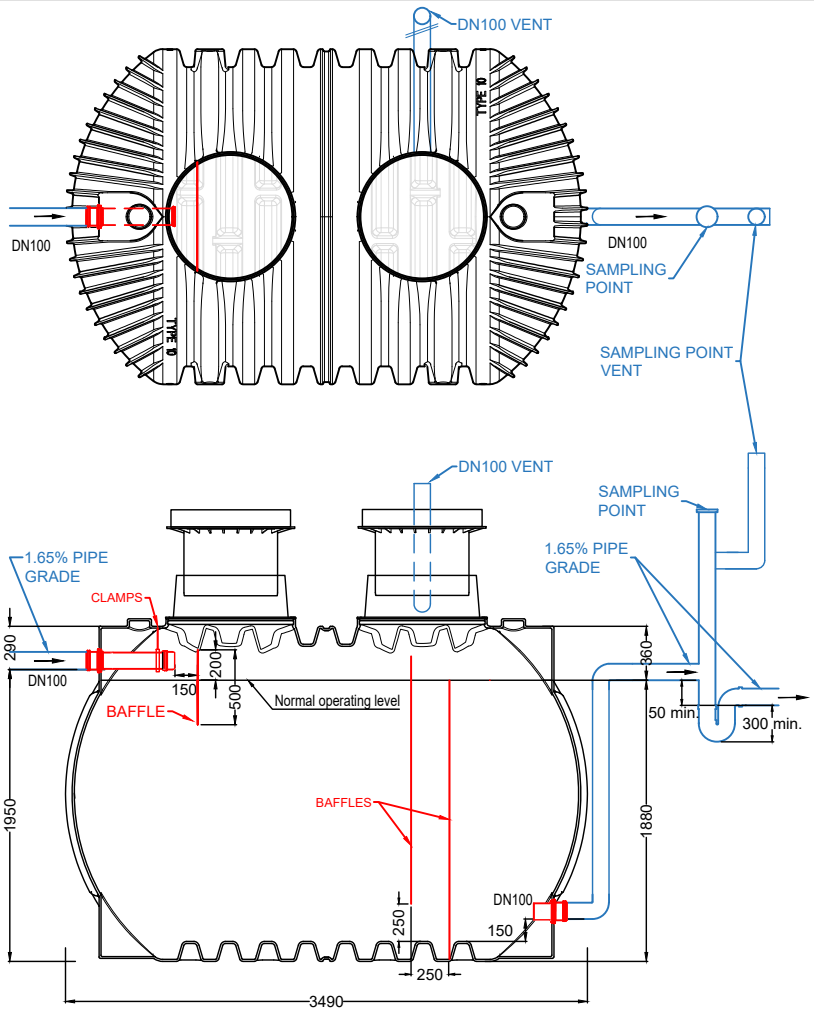

NOTE:
- MANUALS MUST BE OBSERVED
- RED ITEMS ARE PROVIDED
- BLUE ITEMS BY OTHERS
- WHERE SAMPLING POINT REQUIREMENTS ARE NOT SPECIFIED BY RELEVANT AUTHORITY OF JURISDICTION, THESE WATER CORPORATION DRAWINGS ARE AVAILABLE: TRADE WASTE SAMPLING POINT (HX33-11-30) AND SEALED TRADE WASTE SAMPLING POINTS (HX33-10-10)

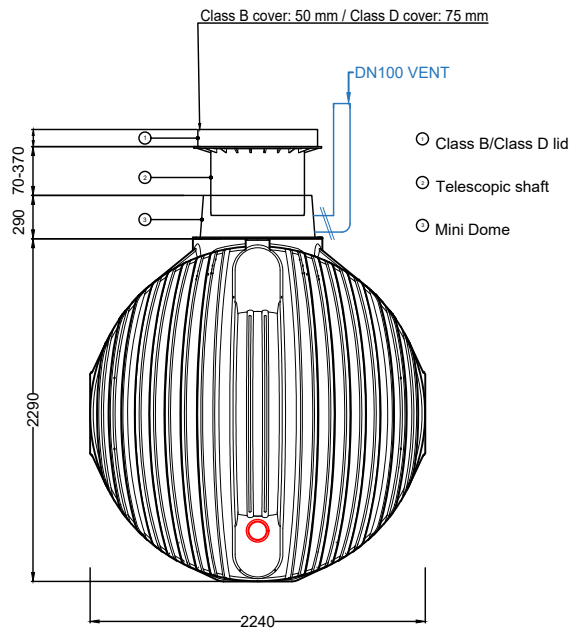

article: General Purpose Pit SC 10000			article no.: 31.0409
drawn: ISC	weight: 495 kg	comments: Extension risers are available.	GRAF Australia Pty Ltd 43b Sparks Road, Henderson WA 6166 info@grafaustralia.com.au www.grafaustralia.com.au
date: 2026.03.13	tolerance: +/- 3%	scale: 1:50 @ A4	units: mm