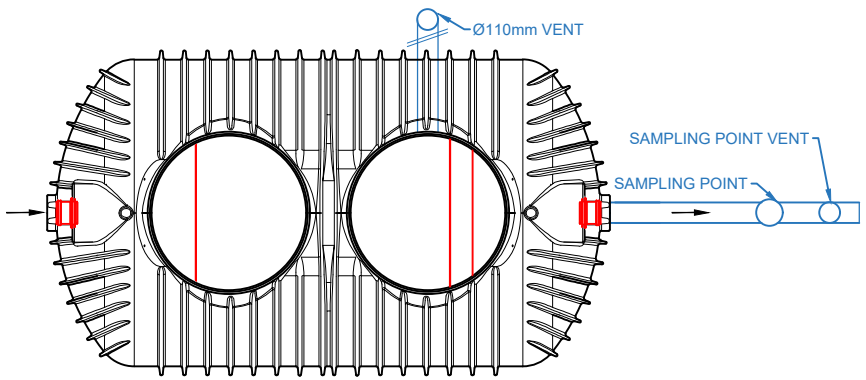

NOTE:
EXTRUSION WELDED 4MM PE BAFFLE
MANUALS MUST BE OBSERVED
• RED ITEMS ARE PROVIDED
• BLUE ITEMS ARE EXCLUDED

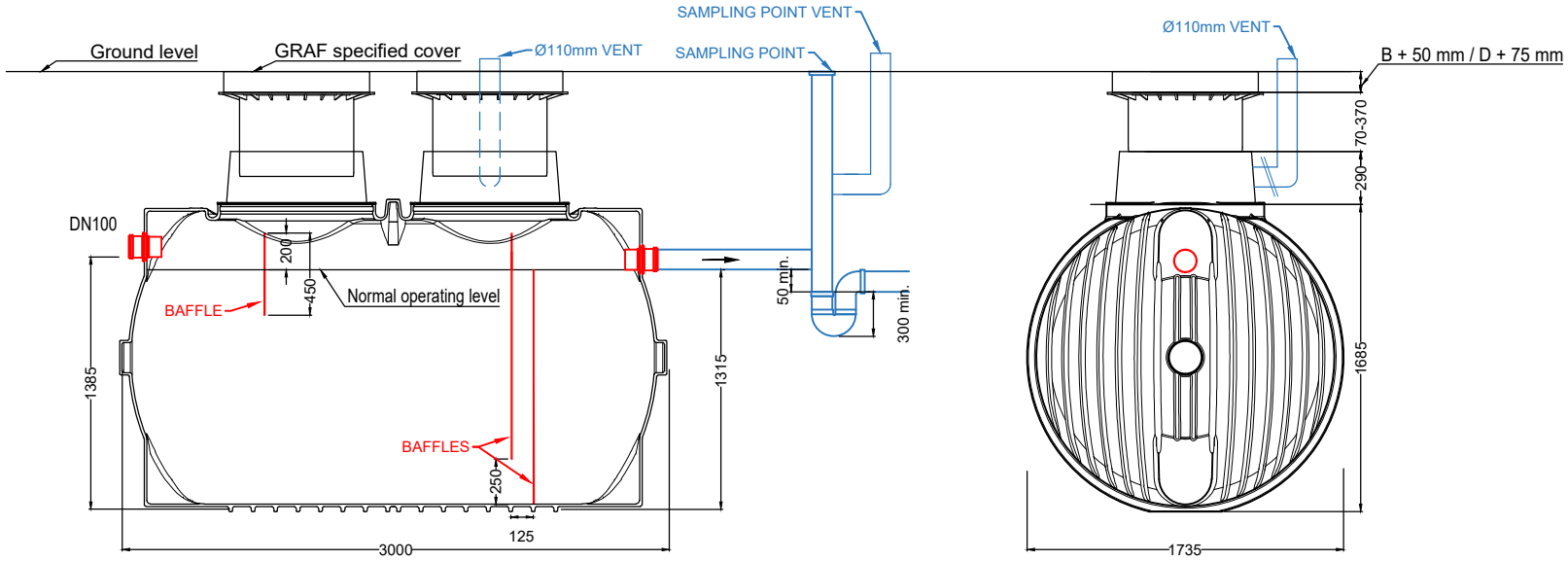

article: Below Ground General Purpose Pit SC 5000 VIC specs			article no.: 31.0407V
drawn: ISC	weight: 355 kg	comments: sampling point requirements to be confirmed by water authority of jurisdiction	GRAF Australia Pty Ltd 43b Sparks Road, Henderson WA 6166 info@grafaustralia.com.au www.grafaustralia.com.au
date: 2026.03.13	tolerance: +/- 3%	scale: 1:40 / units: mm	